INVERTER MODEL LIST	
ITEM NO.	MODEL NUMBER
1	3T603059
2	
3	
4	

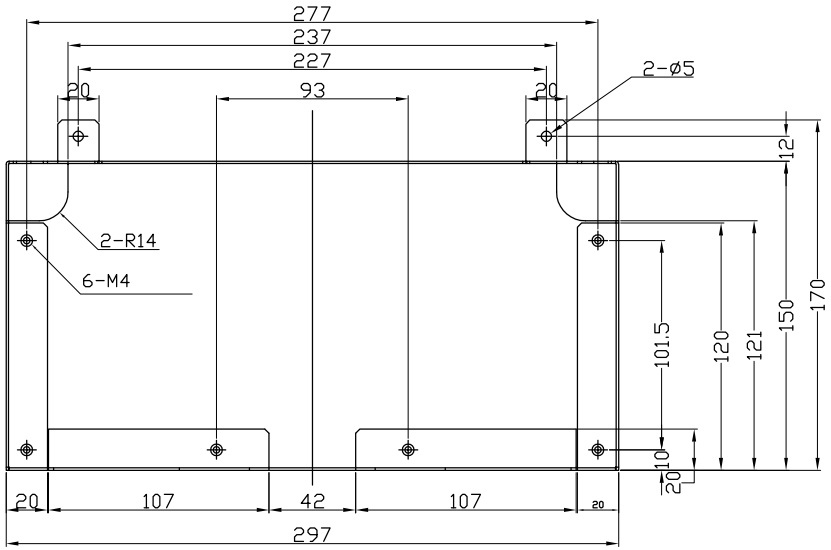

PROPRIETARY AND CONFIDENTIAL

THE INFORMATION CONTAINED IN THIS DRAWING IS THE SOLE PROPERTY OF HITACHI USA LTD. ANY REPRODUCTION IN PART OR AS A WHOLE WITHOUT THE WRITTEN PERMISSION OF HITACHI USA LTD. IS PROHIBITED

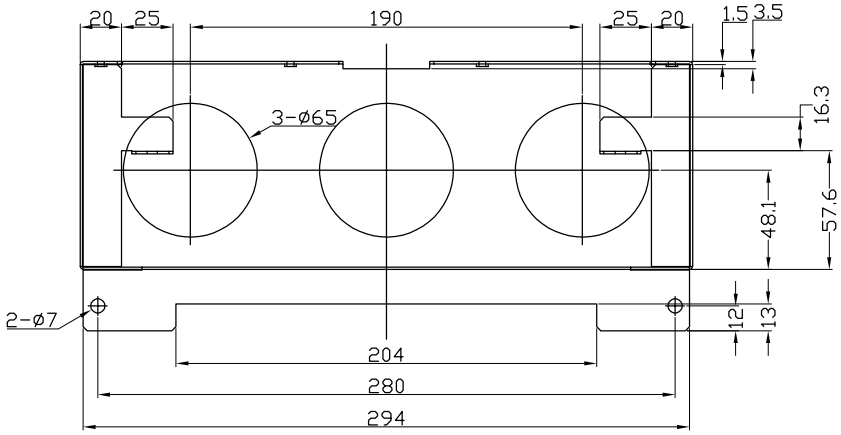

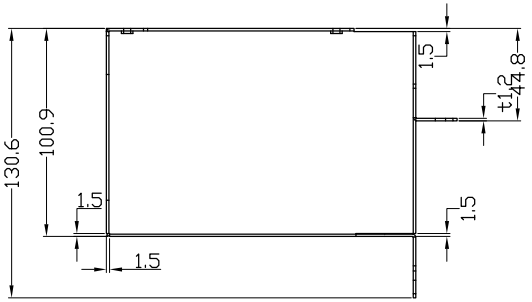

UNLESS OTHERWISE SPECIFIED:		NAME	DATE
DIMENSIONS ARE IN MM/INCHES GENERAL TOLERANCES ACCORDING TO ISO 2768-mH-E	DRAWN	DBM	23JAN19
	CHECKED		
	ENG APPR.		
	MFG APPR.		
INTERPRET GEOMETRIC TOLERANCING PER:	Q.A.		
MATERIAL	COMMENTS:		
FINISH			

HITACHI ICED USA

TITLE: 3T603059 PART 1 OF 2 P1-CB-D

SIZE	DWG. NO.	REV
		A

SCALE:	WEIGHT:	SHEET 1 OF 1